16-Channel I/O Fiber Converter with 1+1 Backup

Model: FCP-1500-K16-BA

Single-fiber dual-fiber port · 1+1 optical backup
Digital remote transmission · redundant dual power supply



Product Overview

- Transmit digital states over fiber for industrial, process, traffic, banking and power systems requiring resistance to electromagnetic interference.
- Separate primary and backup fibers. Switch to backup if the primary fiber breaks, then return when it recovers.
- Fiber reduces EMI, ground-loop interference and lightning-damage risk, improving reliability, safety and data security. Fanless aluminum enclosure.

Key Features

- **Fiber backup** Dual FC single-fiber optical port, supports 1+1 backup.
- **Switching** Primary/backup switch <1 ms, maintains switch status.
- **Filtering** Eliminate interference pulses and stabilize digital output.
- **Fiber loss** Set each channel to open/closed state when no light is transmitted.
- **Surge safety** Power supply and digital interface are both 6 kV.
- **Dual power** Redundant dual inputs, overload and reverse connection protection.

Typical Application

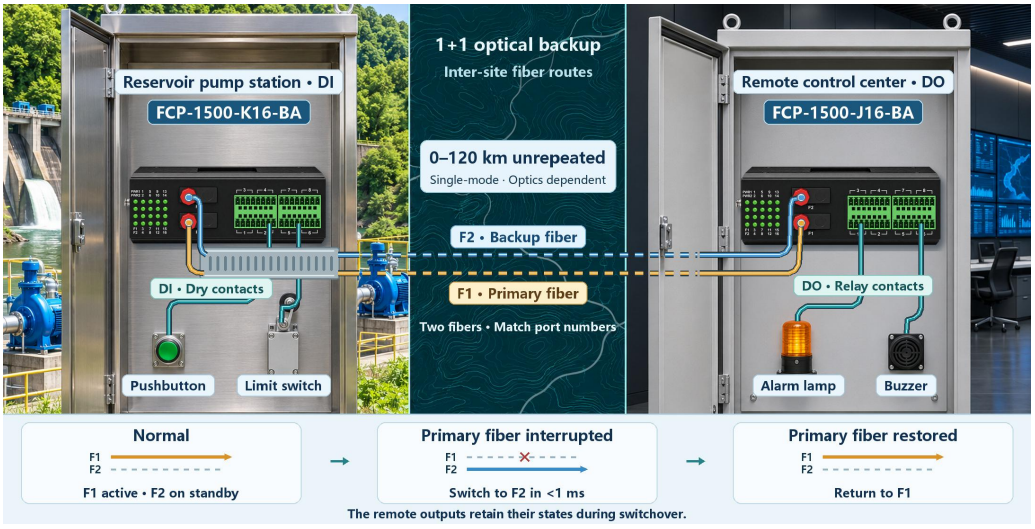

Pair F1 and F2 by port number, one fiber each. Single-mode reach without repeaters is 0–120 km, depending on optics. Match channels and load ratings. Use an interposing relay as needed.

Address: 7F, Building 2, NO.9 XiYuan 2nd Road, West Lake Technology Park, Hangzhou, China.
Website: www.fctele.com Email: service@fctele.com Tel.: +86 18966484617

Interfaces and Installation

Front • FC single-fiber version

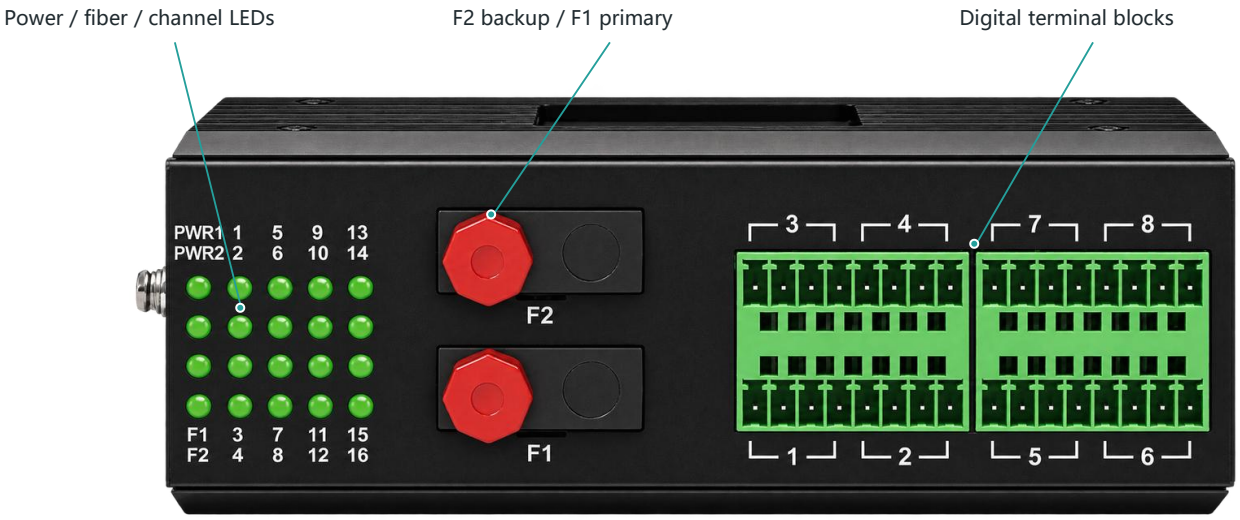

Side • Power supply and settings

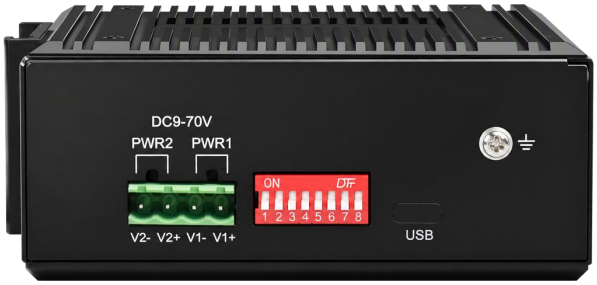

PWR1/PWR2: V1−、V1+、V2−、V2+;
DIP switch and protective grounding stud.

Back • DIN-rail mount



Central DIN-rail clip and rear mounting structure.
Installation method: rail or wall-mounted; accessories according to order.

Terminal markings indicate common housing labels; specific wiring and channel correspondence for 16-channel digital signals follow the defined input/output wiring scheme. USB is a housing label and does not represent the communication capability of this device.

Digital interface and status control

Item	Technical specifications
Channel / Direction	Supports 1–16 channels for unidirectional or 8 channels for bidirectional transmission; this specification lists K16 input terminals, J16 output terminals, and K8J8 bidirectional configurations with 8 inputs and 8 outputs per terminal.
Signal type	Supports dry contact and wet contact; input on/off states are automatically detected, and outputs reflect the corresponding input states.
Input filtering	The digital input interface comes with a filter to eliminate interference pulses, ensuring stable digital signal output at the output.
Status Indicators	Each channel is equipped with an on/off indicator light; optical and PWR1/PWR2 power status is visible.
Power on / no optical connection	When the system is powered on or the fiber is not connected, the switch state remains stable, avoiding erratic actions.
Fiber cut output setting	Each digital channel can be configured as normally open or normally closed when the fiber is disconnected.
Signal relay output	Dry contact; rated 30 VDC / 2 A; response time <1.2 ms; no surge protection for the output device.

Address: 7F, Building 2, NO.9 XiYuan 2nd Road, West Lake Technology Park, Hangzhou, China.
Website: www.fctele.com Email: service@fctele.com Tel.: +86 18966484617

Item	Technical specifications
Optical MOS relay output	Dry contact output, maximum internal resistance 25 Ω; rated 245 VDC / 0.12 A; response time <0.6 ms; protected by TVS + solid discharge tube.
Pulse quantity / wet contact	Optical MOS output 0–VCC; VCC is the power supply voltage of the device. Maximum switching frequency 50 Hz.

Two output devices are selected according to respective configurations; the rated capabilities of the optical MOS cannot be used for signal relays. Specific pins and channels are defined according to the matching wiring.

Optical circuit and optical parameters

Item	Specifications & Features
Interface / topology	2 single-fiber FC optical ports; point-to-point connection; F1 is the primary port, F2 is the backup port, achieving 1+1 optical backup.
Main/Standby switch	When the main fiber is broken, switch to the standby fiber; return to the main fiber after it is normal; the main/standby switch time <1 ms, and the switching process does not affect the status of the transmitted switch quantities.

Optical item	Multimode configuration	Single-mode configuration
Fiber specification	50/125 μm or 62.5/125 μm	8/125 μm or 9/125 μm
Transmission Distance	2 km	20 km standard; 0–120 km without repeaters, depending on optics
Fiber attenuation	3 dB/km	0.35 dB/km
Wavelength	850 nm	1310 nm; select 1550 nm for ultra-long distances
Transmit power	−12 dBm（Min）−−9 dBm（Max）	−9 dBm（Min）−−5 dBm（Max）
Receiving sensitivity	−28 dBm（Min）	−27 dBm（Min）
Link Budget	16 dB	18 dB

The listed transmit power, receiver sensitivity and link budget are for standard optics. Select extended-reach optics based on link loss and match the primary and backup paths separately. Specify distance, wavelength pairing and fiber type when ordering.

Lightning protection and surge protection

Interface or Item	Rating / Test Conditions	Protection Notes
Digital interface	Differential mode 6 kV; common mode 6 kV	Reduce the impact of lightning strike induction and switching transient overvoltage on the signal interface.
Power Interface	Differential mode 6 kV; common mode 6 kV	Power supply lightning protection and surge protection; also includes internal isolation, overload, and reverse connection protection.
Test Standards for Surge Protection:GB/T 17626.5 (IEC 61000-4-5) surge immunity test;**Open-circuit voltage waveform:**10/700 μs;**Test source impedance:**40 Ω。		

Electrical, Structure, and Environment

Item	Technical specifications
Power supply / Power consumption	Redundant dual-channel DC 9–70 V input, only DC; power consumption ≤5 W.
Power terminals	4-pin, 5.08 mm pitch plug terminals; two groups of PWR1/PWR2, wired according to V1−, V1+, V2−, V2+ labeling.
Electromagnetic Compatibility	Meets Class 4 industrial electromagnetic compatibility requirements.
Enclosure / heat dissipation	IP40 aluminum alloy casing; fanless high-efficiency cooling, reducing repair time.

Address: 7F, Building 2, NO.9 XiYuan 2nd Road, West Lake Technology Park, Hangzhou, China.
Website: www.fctele.com Email: service@fctele.com Tel.: +86 18966484617

Item	Technical specifications
Installation / Dimensions / Weight	Rail or wall-mounted installation; 133×110×50 mm; 0.7 kg.
Environmental Conditions	Operating temperature: −40–+85 °C (industrial level); Storage temperature: −40–+85 °C; Operating humidity: 0%–95%, no condensation.
Reliability / Warranty	MTBF > 500000 h; All models undergo 100% burn-in test; Warranty period: 5 years.

Dimensions and Mounting

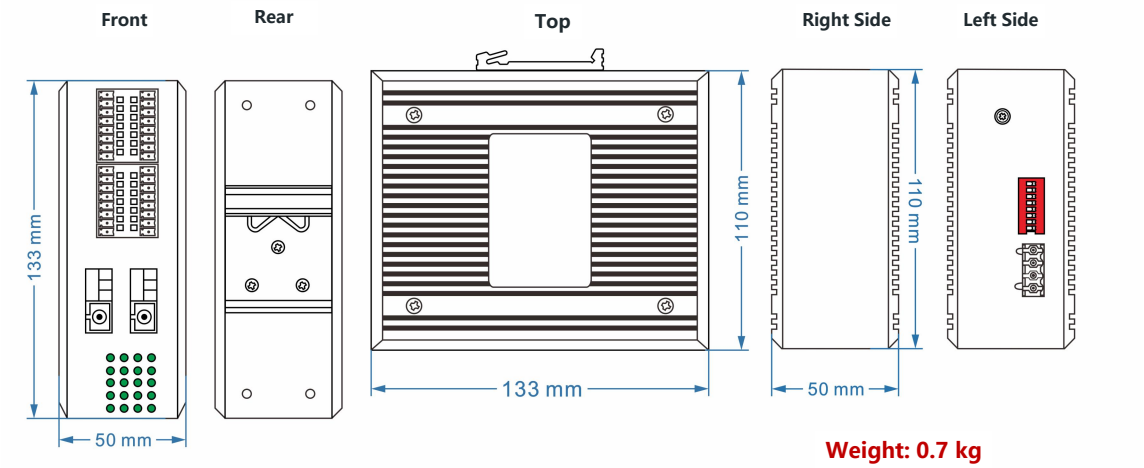

Physical dimensions: 133×110×50 mm; Weight: 0.7 kg. The unit shown is mm; sufficient space is reserved for fiber optic bending, terminal plugging, and wiring during installation.

Ordering Information

Model segmentation: FCP- | 1500- | K16 | -BA fiber backup

NO	Name	Definition
1	FCP-	Model prefix for this series of products
2	1500-	Product series code.
3	K16	K represents digital input channels; K16 indicates 16 digital input channels.
4	J16	J represents digital relay outputs; J16 indicates 16 output channels; used in pairs with K16 input channels as positive-side channels.
5	K8J8	8 digital input channels per terminal + 8 digital output channels, enabling bidirectional 8-channel transmission.
6	-BA Fiber Backup	-BA indicates 1+1 fiber backup: F1 as main, F2 as standby; two FC single-fiber ports are connected to the main and standby fibers respectively.

Full Model Code	Configuration
FCP-1500-K16-BA	16-channel input unit; pair with FCP-1500-J16-BA for 16-channel unidirectional digital signal transmission.
FCP-1500-J16-BA	16-channel relay output port; equipped with FCP-1500-K16-BA, used according to the channel requirement.
FCP-1500-K8J8-BA	8 inputs + 8 outputs per unit; two units in pairs to achieve bidirectional 8-channel transmission.

All three configurations use 2 FC single-fiber ports, 1+1 optical backup, and redundant dual power supplies. Specify the signal type, fiber type and distance, power supply, and accessories during ordering; the optical devices at both ends are matched, and the quantity is specified per unit.

Document version: V1.11 EN Revision date: 2026-11-22

Address: 7F, Building 2, NO.9 XiYuan 2nd Road, West Lake Technology Park, Hangzhou, China.
Website: www.fctele.com Email: service@fctele.com Tel.: +86 18966484617