Industrial DIN-Rail Cellular Router

4GE+2.5G SFP+8 serial ports/16 I/O, Wi-Fi 6

Model: FCT-6600-G4U1

4G Cat.4/5G RedCap/Full-featured 5G
Dual SIM single standby · eSIM varies by version



Product Overview

- Connect digital, analog and serial instruments for industrial automation, energy, environmental monitoring, smart water and transport networking and remote control.
- 16 I/O positions in groups of 2; each group can become 1 serial port, up to 8 ports.
- Black anodized brushed aluminum enclosure, fanless; DIN-rail or wall mounting.

Key Features

- **Port mix** — 4 Gigabit copper Ethernet ports, 1G/2.5G adaptive SFP, and Wi-Fi 6.
- **Link Failover** — WAN and selected cellular network serve as backup, with link recovery detection.
- **Protocols** — Serial port supports Modbus RTU to TCP, and supports MQTT/JSON.
- **Protection** — Power supply and serial port have 6 kV surge protection, 4 kV network port surge protection, and dual DC wide-voltage redundant inputs.

Address: 7F, Building 2, NO.9 XiYuan 2nd Road, West Lake Technology Park, Hangzhou, China.
Website: www.fctele.com Email: service@fctele.com Tel.: +86 18966484617

Typical Application

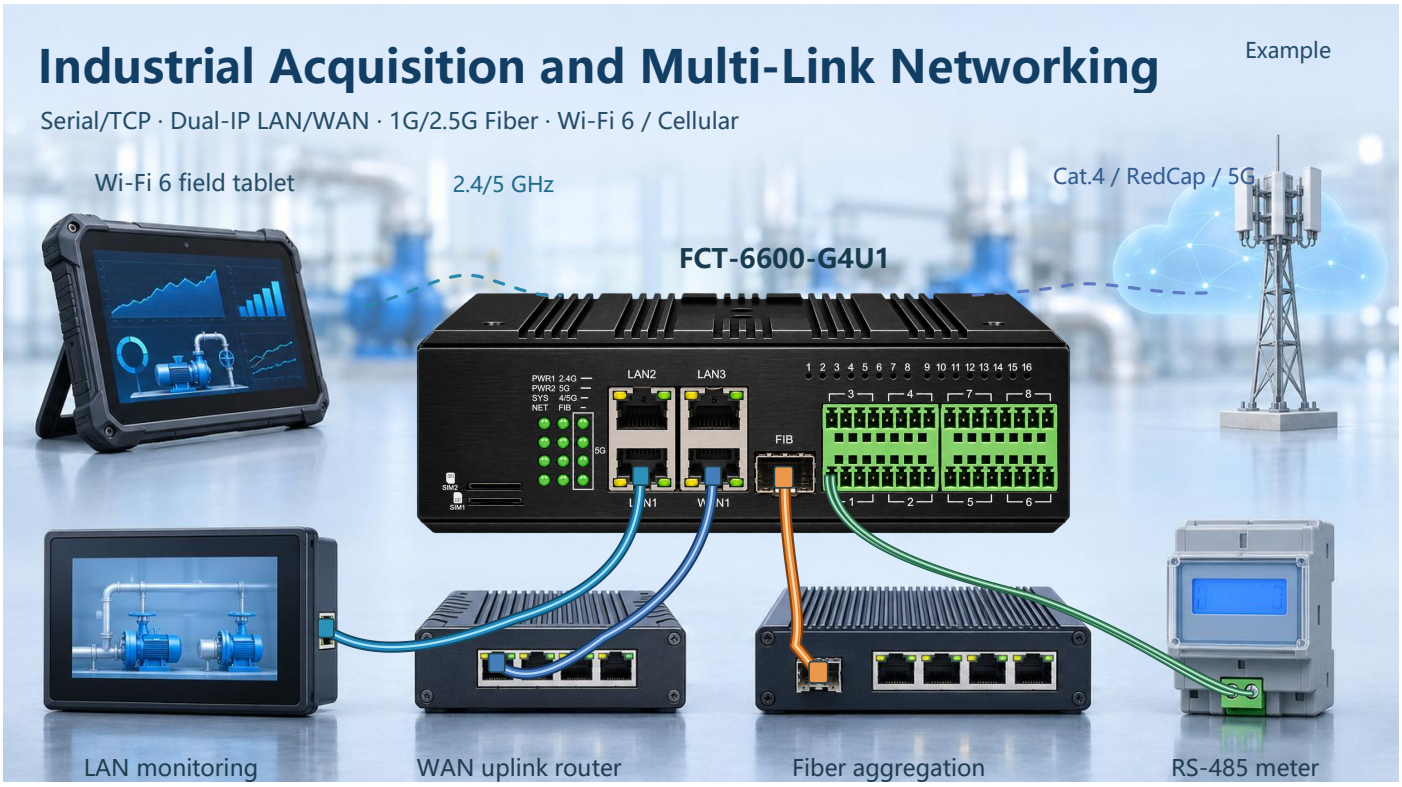

RS-485 meter A/B connected to serial terminal, gateway converts Modbus RTU to Modbus TCP for LAN monitoring and reading. LAN/WAN each equipped with IP; SFP connected to matching module at 1G or 2.5G. Dashed line represents wireless logical link, serial terminal shown at terminal group level.

Interfaces and Installation

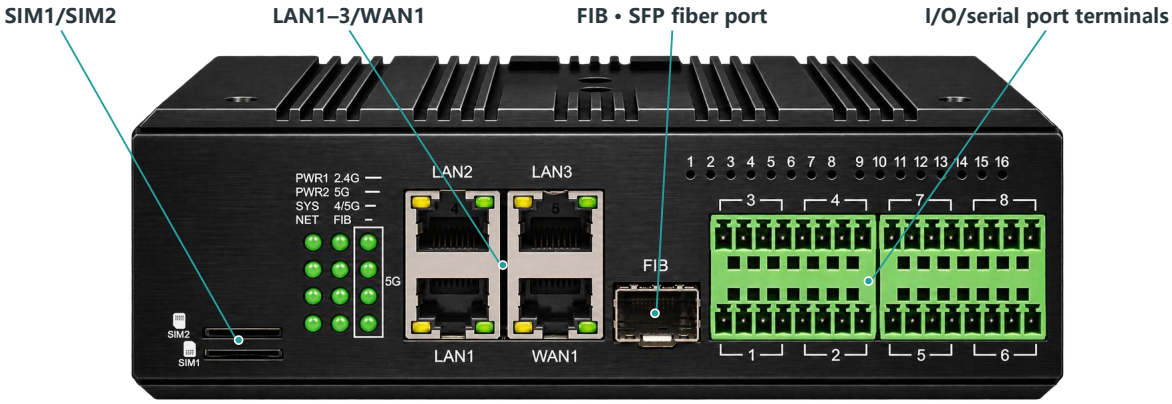

3 LAN, 1 WAN, 1 SFP and serial/I/O terminals, black anodized brushed aluminum alloy body.

Address: 7F, Building 2, NO.9 XiYuan 2nd Road, West Lake Technology Park, Hangzhou, China.
Website: www.fctele.com Email: service@fctele.com Tel.: +86 18966484617

Power / wireless

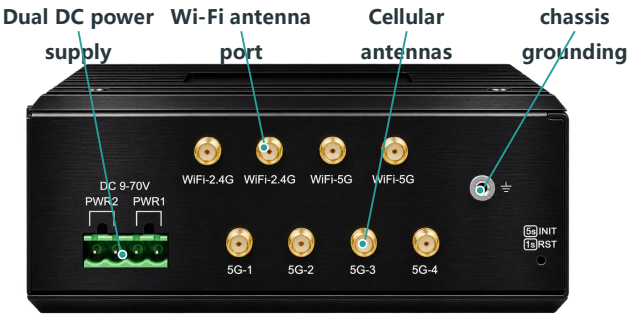

Number of antennas depends on the selected wireless version.
INIT/RST hole on side.

DIN-Rail



Central back rail clip
35 mm DIN rail or wall-mounted installation

Dimensions

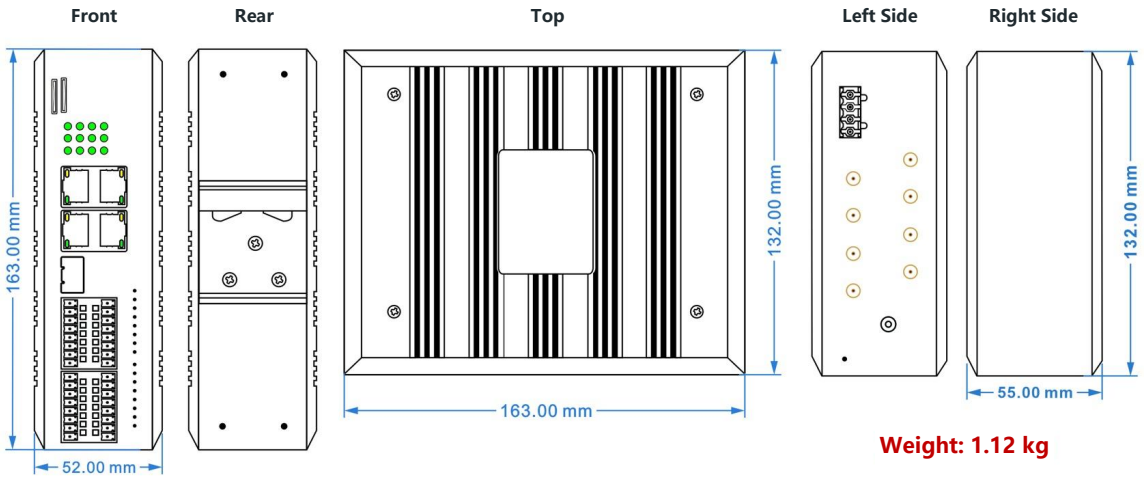

Weight: 1.12 kg

Five-view drawing: 163 × 132 mm; thickness specified as 52 mm in front view and 55 mm in side view; approximately 1.12 kg.

Power supply and protection

Item	Specification
Power	Dual DC 9–70 V redundant inputs, internal isolation; supports polarity auto-detection, overload and reverse connection protection, and power surge protection. 4-pin 5.08 mm pluggable terminals.
Total Power Consumption	< 12 W。

Hardware and environment

Item	Specification
Processor/memory	Four-core ARM Cortex-A53, 1.8 GHz, 256 MB DDR.
Ethernet port	3 × LAN+1 × WAN, RJ45, 10/100/1000 Mbps adaptive, full/half-duplex, Auto MDI/MDIX. MAC address table capacity 4096.
Fiber Port	1 × SFP optical Ethernet port, 1G/2.5G adaptive. Optional SFP optical modules at corresponding speeds; both ends' speed, wavelength, and fiber type must match.
Serial ports and I/O	Up to 16 DI/DO/AI/AO channels, grouped in pairs of 2. Each group can be replaced by a single serial port, up to 8 channels, with group-based mixing supported.

Address: 7F, Building 2, NO.9 XiYuan 2nd Road, West Lake Technology Park, Hangzhou, China.
Website: www.fctele.com Email: service@fctele.com Tel.: +86 18966484617

Item	Specification
Serial port communication	RS-232, RS-422, or RS-485 configured according to the selected protocol. 300–150,000 bps, line-speed non-blocking. Supports Modbus RTU to Modbus TCP.
Mechanical and Environmental	IP40, fanless, black anodized brushed aluminum enclosure. Operating/storage −40 to +85 °C; humidity 0–95% RH, non-condensing.
Reliability	MTBF ＞100,000 hours.

Acquisition and Control

Item	Parameters	Technical Specifications
Digital input DI	Input Type	Supports dry contact, NPN or PNP transistor wet contact, and active signals. Supports active reporting and input linkage.
Digital output DO	Dry contact	Signal relay, 30 VDC/2 A, up to 50 Hz, response ＜1.2 ms.
	Wet contact/Pulse	Optical MOS relay, 245 VDC/0.12 A, output 0–VCC (local power supply voltage), response ＜0.6 ms.
	Output surge protection	Wet contact uses TVS and solid discharge tube; dry contact relay output lacks this protection.
Current input/output	Range	0–20 mA (including 4–20 mA), configurable range; linked output control supported.
	Resolution/Sampling	12 bits, 20,000 times/s.
	Delay/Normal temperature accuracy	＜0.1 ms, 0.2%。
	Input resistance/Output load	125 Ω/maximum 600 Ω.
Voltage input/output	Range	0–10 V (including 0–5 V) or −5 to +5 V, configurable range; linked output control supported.
	Resolution/Sampling	12 bits, 20,000 times/s.
	Delay/Normal temperature accuracy	＜1 ms, 0.2%。
	Input resistance/Output load	100 kΩ/maximum 600 Ω.
Analog sensor	Connection Method	AI supports 2-line, 3-line, or 4-line sensors.

Serial Pinout

Standard	Signal	Standards
RS-232	RXD、TXD、GND	EIA/TIA-232（ITU-T V.28）
RS-422	TxD+、TxD−、RxD+、RxD−	EIA/TIA-422（ITU-T V.11）
RS-485 four-wire	TxD+、TxD−、RxD+、RxD−	EIA/TIA-485
RS-485 two-wire	A（TX+）、B（TX−）、GND	EIA/TIA-485

Port Surge Protection

Interface or test item	Rating / Test Conditions	Protection Notes
Power Interface	6 kV (open-circuit peak)	Reduces lightning induction and switch operation surge risks on power lines; supports overload protection, DC terminals support reverse connection protection.
Serial interface	6 kV (open-circuit peak)	RS-232/RS-422/RS-485 used as optional configuration, reducing lightning induction and switch operation surge risks on signal lines.
RJ45 Ethernet interface	4 kV (open-circuit peak voltage)	Reduces lightning induction and switch operation surge risks on network lines.

Address: 7F, Building 2, NO.9 XiYuan 2nd Road, West Lake Technology Park, Hangzhou, China.
Website: www.fctele.com Email: service@fctele.com Tel.: +86 18966484617

Interface or test item	Rating / Test Conditions	Protection Notes
Test Standards for Surge Protection:GB/T 17626.5 (IEC 61000-4-5) surge immunity test;**Open-circuit voltage waveform:**10/700 μs; **Test source impedance:**40 Ω。		

Networking and Software

Network access and reliable operation

Item	Function
Operating System	OpenWrt。
Wired Connection	Static IP, DHCP, PPPoE. IP configured separately for LAN and WAN, with cross-network routing support.
Cellular Access	Cellular dialing, supporting APN/VPDN private networks.
Dial authentication	CHAP, PAP, MS-CHAP, MS-CHAPv2, and no authentication.
Link Failover	Backup for wired and cellular links, wired recovery detection, and dual SIM failover.
Online Maintenance	Heartbeat and online detection, connection reset, watchdog, and system monitoring.
Routing function	NAT, PAT, DMZ, port mapping, virtual servers, and DDNS.
Firewall	SPI status packet detection, iptables firewall configuration, and DDoS protection.

Remote management and data functions

Item	Function
VPN compatible	PPTP/L2TP, supports setting of retry interval and count.
Device Management	Web management and upgrade, SMS control, network connection and status notification. PHP local browsing and remote synchronization of local storage content.
Wi-Fi management	Wireless relay, WDS bridging, guest network, time period control, regional channel and transmission power adjustment.
Serial port transparent transmission	RS-232/422/485; TCP/UDP Server, Client. Can be connected to configuration screen, PLC or external instrument for self-polling.
Protocol Conversion	Modbus RTU to Modbus TCP.
MQTT data	Multi-topic publishing/subscription, MQTT transparent transmission, Modbus to JSON, JSON parsing and scheduled reporting.
Cloud platform	Supports integration with Huawei Cloud, Alibaba Cloud and Mobile Cloud.

Dual SIM single standby, switchable according to configuration. eSIM available for the selected cellular version: optional EA version for full 5G, not supported for CNV version; requires operator activation. Link restoration is affected by network and configuration.

Wi-Fi 6 dual-band wireless

Item	Specification
2.4 GHz	IEEE 802.11b/g/n/ax, 20/40 MHz, theoretical peak 573.5 Mbps.
5 GHz	IEEE 802.11a/n/ac/ax, 20/40/80/160 MHz, theoretical peak 2400 Mbps.
Mode and antenna	Supports AP and Client. 2 × 2 MIMO per band, total 4 antenna interfaces for two bands.

Cellular version selection

Item	4G Cat.4	5G RedCap	Full 5G
Selection Code	UF	UR	UG

Item	4G Cat.4	5G RedCap	Full 5G
Standard	3GPP Rel-9, LTE FDD/TDD; no carrier aggregation	3GPP Rel-17, NR SA; LTE Cat.4 fallback	Sub-6 GHz, NR SA/NSA, LTE/WCDMA; EA: Rel-15; CNV: Rel-15, new features optional for Rel-16
Theoretical down/up	FDD 150/50 Mbps; TDD 130/30 Mbps	NR SA 226/120 Mbps; LTE 150/50 Mbps (module theoretical peak)	SA: 2/1 Gbps; NSA: EA 2.6 Gbps/650 Mbps, CNV 2.2 Gbps/575 Mbps (theoretical values)

Full-featured 5G regional version

Item	RM500U-EA	RM500U-CNV
Region/Order suffix	Asia-Pacific, Latin America; full-feature 5G region suffix -EA	Asia-Pacific; local China configuration region suffix -CN
Network standard	3GPP Release 15; 5G NR SA/NSA, Sub-6 GHz; LTE/WCDMA fallback	3GPP Release 15; 5G NR SA/NSA, Sub-6 GHz; Release 16 and 5G new features optional; LTE/WCDMA fallback
NR SA frequency band	n1/3/5/7/8/20/28/38/40/41/66/77/78	n1/3/5/8/28A/41/77*/78/79
NR NSA frequency band	n1/3/7/28/38/40/41/77/78	n41*/78*/79*
NR SA Rate	Downlink 2 Gbps; Uplink 1 Gbps	Downlink 2 Gbps; Uplink 1 Gbps
NR NSA Rate	Downlink 2.6 Gbps; Uplink 650 Mbps	Downlink 2.2 Gbps; Uplink 575 Mbps
NR DL 4×4 MIMO	n1/3/7/28/38/40/41/66/77/78	n1/28A*/41/77*/78/79
NR UL 2×2 MIMO	n38/40/41/77/78	n41*/77*/78*/79*
NR DL 2×2 MIMO	n5/8/20	n3/5/8
LTE Class	Downlink Cat.12; Uplink Cat.13	Downlink Cat.12; Uplink Cat.13
LTE-FDD	B1/2/3/4/5/7/8/20/28/66	B1/3/5/8
LTE-TDD	B38/40/41	B34/38/39/40/41
LTE DL 2×2 MIMO	B1/2/3/4/5/7/8/20/28/38/40/41/66	B1/3/5/8/34/38/39/40/41
LTE Rate	Downlink 600 Mbps; Uplink 150 Mbps	Downlink 600 Mbps; Uplink 150 Mbps
WCDMA band	B1/2/5/8	B1/5*/8
UMTS speed	Downlink 42.2 Mbps; Uplink 11 Mbps	Downlink 42.2 Mbps; Uplink 11 Mbps
eSIM	Optional; requires operator and delivery configuration support	Not supported
Cellular antenna	4-channel cellular antenna interface	4-channel cellular antenna interface

* Indicates that listed frequency bands or corresponding MIMO capabilities are optional and must be confirmed in the order. All rates above are theoretical peak values; actual performance depends on network configuration. New Rel-16 features are available in the delivered version.

Cellular areas and orders

Choose one of three cellular options: full-feature 5G -EA (Asia-Pacific/Latin America) and -CN (China configuration); dual SIM single standby. eSIM is available based on the selected cellular version and requires operator activation. Actual speed depends on network coverage, package, and delivery configuration.

Address: 7F, Building 2, NO.9 XiYuan 2nd Road, West Lake Technology Park, Hangzhou, China.
Website: www.fctele.com Email: service@fctele.com Tel.: +86 18966484617

4G Cat.4 Regional Band

Model / Region	-CN	-AU	-EU
	China / India	Latin America / Australia / New Zealand	EMEA/ Southeast Asia
LTE-FDD	B1/3/5/8	B1/2/3/4/5/ 7/8/28/66	B1/3/5/7/8/ 20/28
LTE-TDD	B34/38/39/ 40/41	B40	B38/40/41
WCDMA	B1/5/8	B1/2/4/5/8	B1/5/8
GSM	EGSM900/ DCS1800	GSM850/ EGSM900 DCS1800/ PCS1900	EGSM900/ DCS1800

EMEA refers to Europe, Middle East, and Africa. The region suffix is placed at the end of the full model name; access requires matching operator frequency bands and on-site coverage.

5G RedCap Chinese version

Item	-CN/China
5G NR SA	n1/3/5/8/28/40/41/78/79
LTE-FDD	B1/3/5/8
LTE-TDD	B34/38/39/40/41
5G SA theoretical peak value	Downstream/Uplink 226/120 Mbps
LTE theoretical speed	Downstream/Uplink 150/50 Mbps
Cellular antenna	2-way cellular antenna; system conditions to be confirmed according to delivered version

The above is the theoretical module speed; actual performance depends on network configuration. eSIM and physical SIM usage are determined by delivered configuration.

Ordering and Selection

FCT-	6600-	G4U1	Interface code + quantity	UX	UF/UR/UG	-CN/-AU/-EU/-EA
Company + type	Product Series	4GE+1SFP	As in D2K2J2A4M4	Wi-Fi 6	One of three cellular options	Selected according to cellular version

The number follows the interface letter. Serial ports and I/O are replaced in groups: 2 × number of serial ports + number of I/O ports ≤ 16; up to 8 serial ports or 16 I/O ports.

NO	Name		Definition
1	Company name		FC = Feichang.
2	Product Type		T = Industrial gateway.
3	Product Series		6600 = Industrial rail-mounted cellular router series.
4	Port Specifications	Ethernet	G = Gigabit RJ45; G4 = 4 copper Ethernet ports, fixed as 3 LAN + 1 WAN.
		Optical Ethernet	U followed by the count denotes 2.5G SFP ports: U1 = 1 port, U2 = 2 ports. This model's U1 port supports 1G/2.5G auto-detection.
		Serial Port	D = RS-485; R = RS-232; X = RS-422, the number follows the letter.
		DI/DO	K = Digital input DI; J = Digital output DO
		AI/AO	A = current input; M = current output; V = voltage input; Y = voltage output

Address: 7F, Building 2, NO.9 XiYuan 2nd Road, West Lake Technology Park, Hangzhou, China.
Website: www.fctele.com Email: service@fctele.com Tel.: +86 18966484617

NO	Name	Definition
5	Wireless Configuration	UX = Wi-Fi 6; UF = 4G Cat.4; UR = 5G RedCap; UG = Full 5G. Choose one of the cellular codes.
6	eSIM/SIM	Dual SIM, single standby, switchable according to configuration. eSIM available for cellular versions; EA version for full 5G is optional, and CNV version is not supported; requires operator activation.
7	Region suffix	Cat.4: -CN/-AU/-EU; RedCap: -CN; full-feature 5G: -EA (Asia-Pacific/Latin America) or -CN (China, CNV configuration). Put the region suffix last.

Complete model example

Example of order model	Configuration
FCT-6600-G4U1D8UXUG-CN	8-channel RS-485+Wi-Fi 6+Full 5G, Chinese configuration (RM500U-CNV).
FCT-6600-G4U1D8UXUG-EA	8-channel RS-485+Wi-Fi 6+Full 5G, Asia-Pacific/Latin America version (RM500U-EA).
FCT-6600-G4U1D2K2J2A4M4UXUR-CN	2-channel RS-485+2 DI+2 DO+4 current AI+4 current AO+Wi-Fi 6+RedCap, Chinese version.
FCT-6600-G4U1K4J4A4M4UXUF-AU	4 DI+4 DO+4 current AI+4 current AO+Wi-Fi 6+Cat.4, AU version.
FCT-6600-G4U1D8UXUF-EU	8-channel RS-485+Wi-Fi 6+Cat.4, EU version.

The base model is FCT-6600-G4U1. Confirm interface combination, cellular and regional version, eSIM option, SFP module, antenna and accessories during ordering; full-function 5G must indicate EA or CNV configuration. The optical module must match speed, wavelength, fiber type and distance.

Document version: V1.12 EN Revision date: 2026-11-15

Address: 7F, Building 2, NO.9 XiYuan 2nd Road, West Lake Technology Park, Hangzhou, China.
Website: www.fctele.com Email: service@fctele.com Tel.: +86 18966484617